山东理工大学
Shandong University of Technology

电 路

任课教师：魏佩瑜教授

电工电子教研室

1.

5

( )

98

07

0712

071201 ( )

071202 ( )

*071203**

08

0806

080601

080602

080603

080604

080605 ( )

080606

080607

2.

3.

☝

✌

👌

4

4

8

14

15

3

6

1.

•

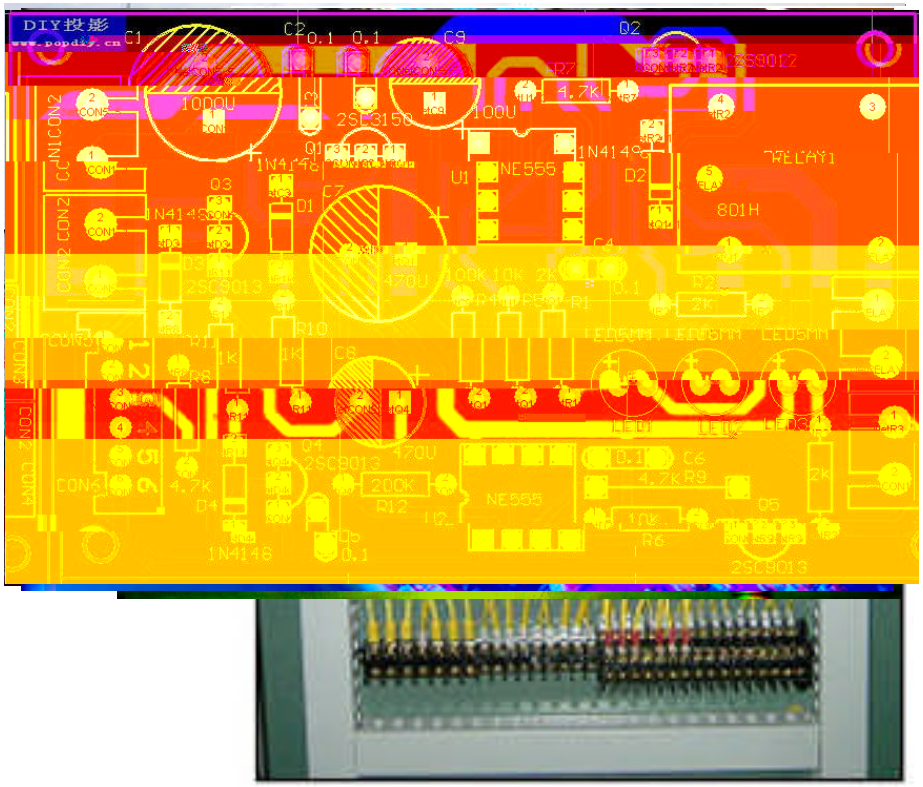
DIY投影
www.popdiy.cn
C1
C2
0.1
0.1
C9
Q2
2SC3150
1000U
100U
4.7K
NE555
1N4148
RELAY1
801H
CON2
CON3
2SC9013
470U
100K
10K
2K
LED5MM
200K
R12
R6
R9
C6
C5
D4
D5

☞

2.

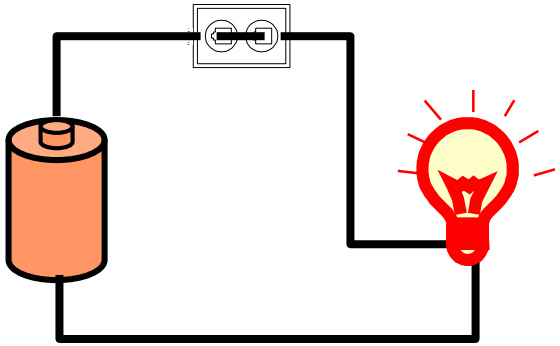

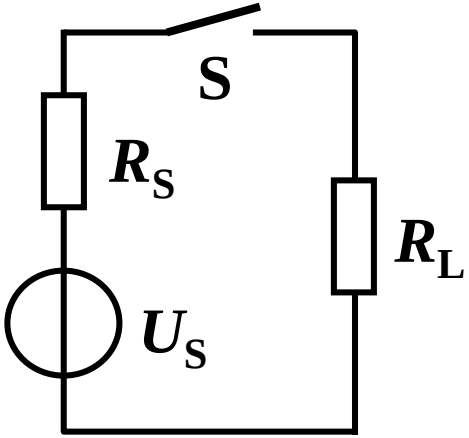

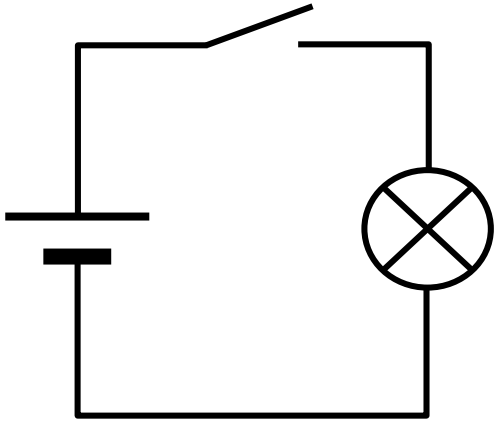

( )

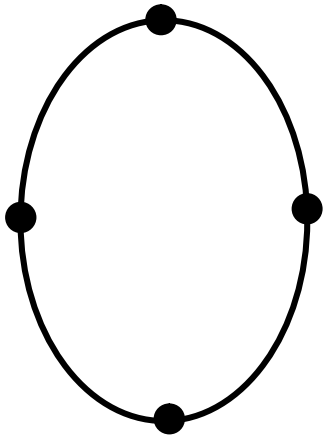

☞ 5

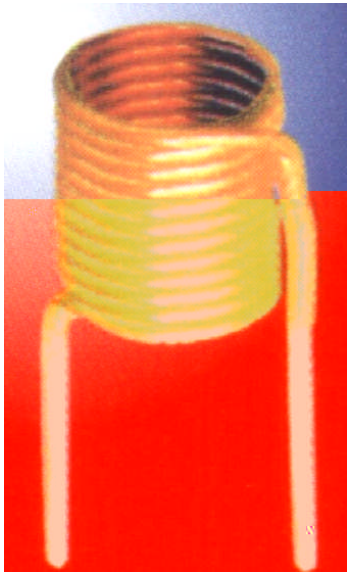

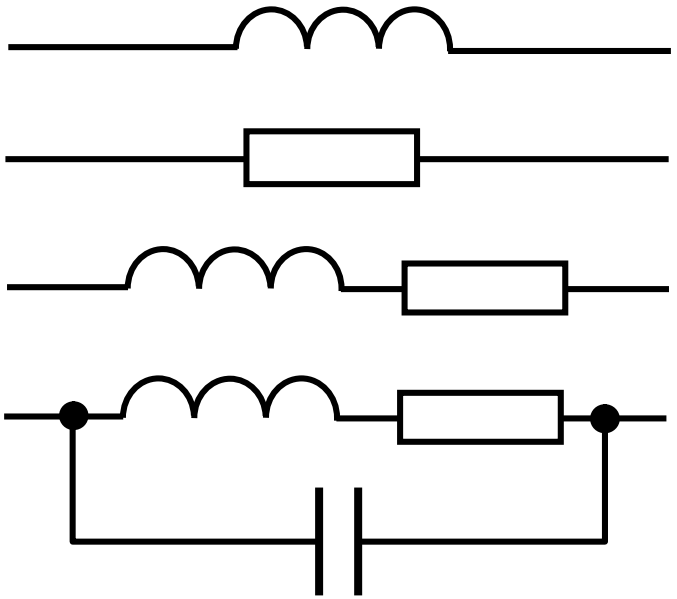

1 2

-
- $$i(t) \overset{\text{del}}{=\!=} \lim_{t \quad 0} \frac{q(t)}{t} \quad \frac{\mathrm{d}q(t)}{\mathrm{d}t}$$
- A ( ) kA mA A

$1\text{kA}=10^3\text{A}$ $1\text{mA}=10 \quad \text{A}$ $1 \quad \text{A}=10 \quad \text{A}$

•

( )

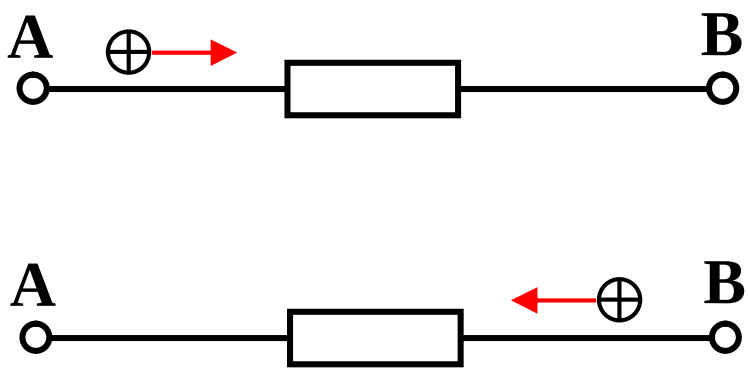
A
B
A
B

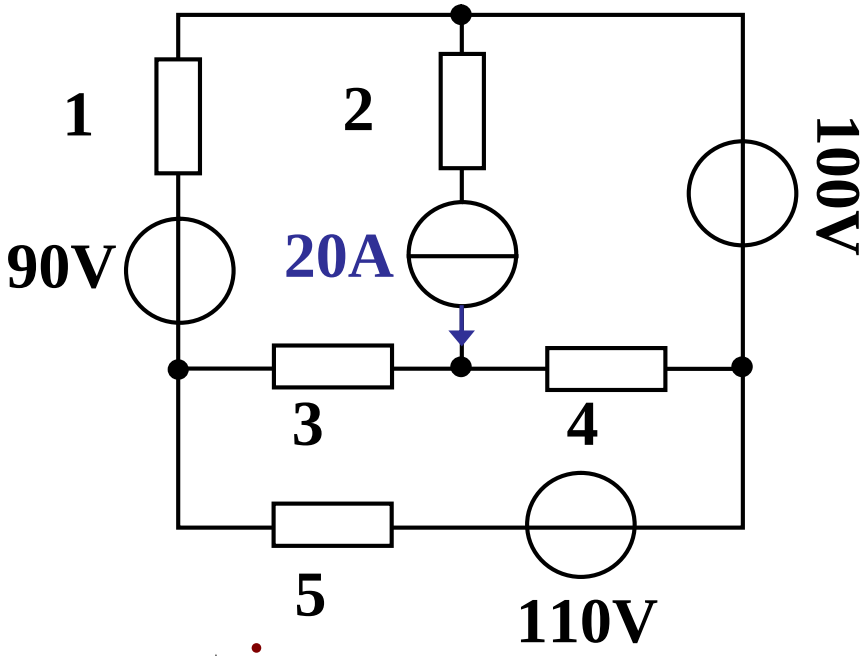
1
2
100V
90V
20A
3
4
5
110V

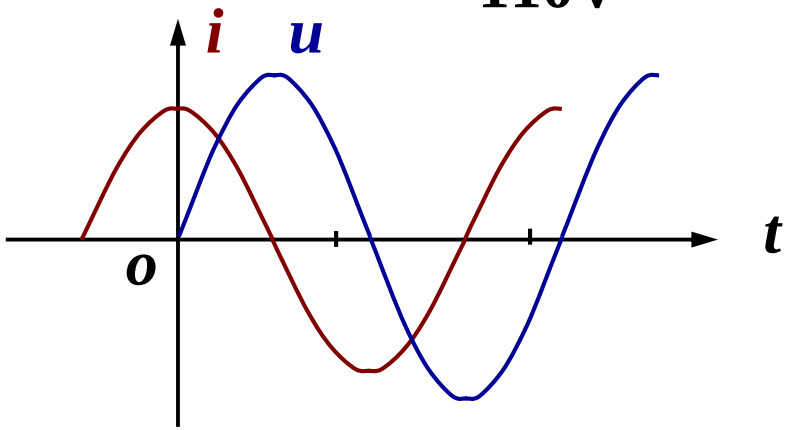
i
u
t
o

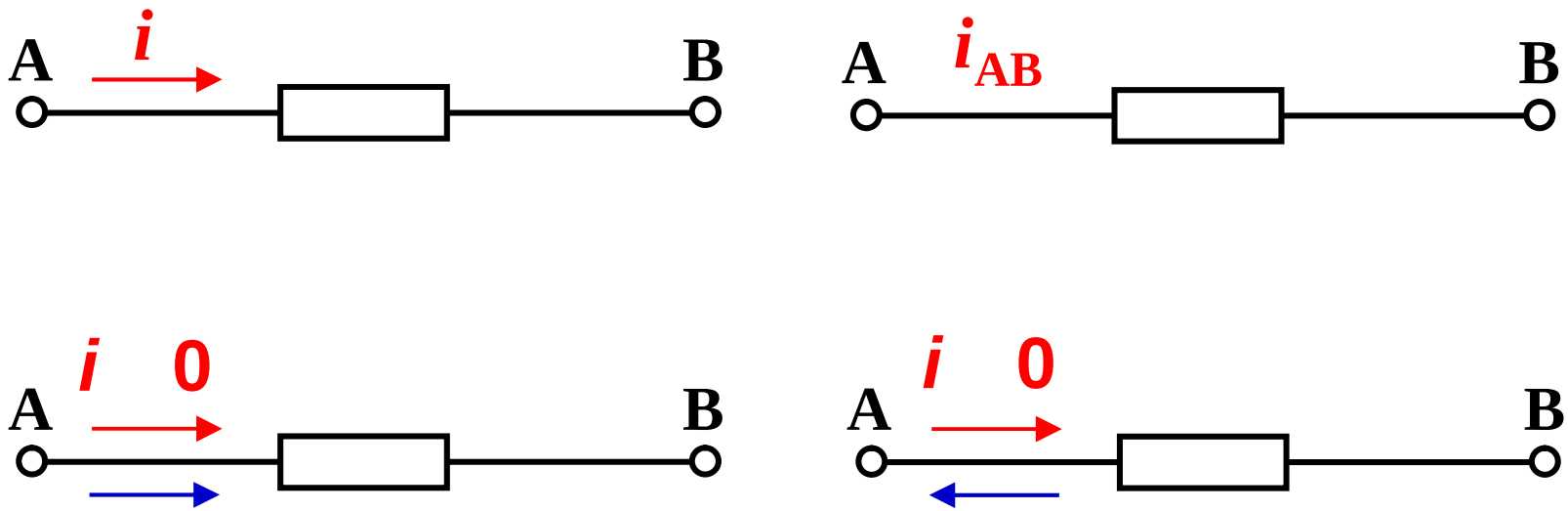

( )

( )

i_{AB}

A B

2.

- ***q***

  (=0)

- ***U*** ***q***

  (*W*)

$$U \overset{\text{del}}{=\!=} \frac{\mathrm{d}W}{\mathrm{d}q}$$

- **V ( ) kV mV V**

4C a

b 8J b c

12J

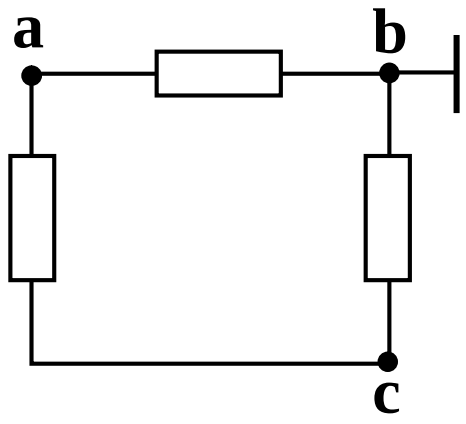

(1) b a b c

U_{ab} U_{bc}

(2) c

(1) b 0

a $\frac{W_{ab}}{q}$ $\frac{8}{4}$ 2V

c $\frac{W_{cb}}{q}$ $\frac{W_{bc}}{q}$ $\frac{12}{4}$ 3V

U_{ab} a b

2 0 2V

U_{bc} b c

0 3V

4C a

b 8J b c

12J

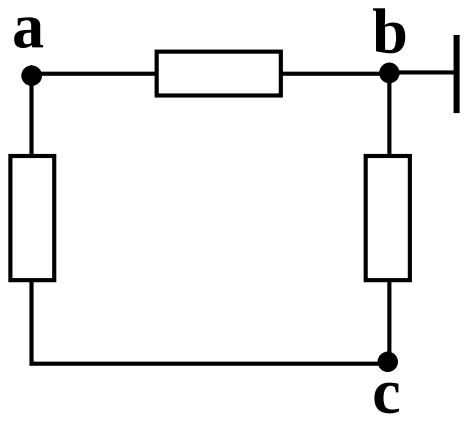

(1) b a b c

U_{ab} U_{bc}

(2) c

(2) c 0

a $\frac{W_{ac}}{q}$ $\frac{(8\ \ 12)}{4}$ 5V

b $\frac{W_{bc}}{q}$ $\frac{12}{4}$ 3V

U_{ab} a b

5 3 2V

U_{bc} b c

3 3V

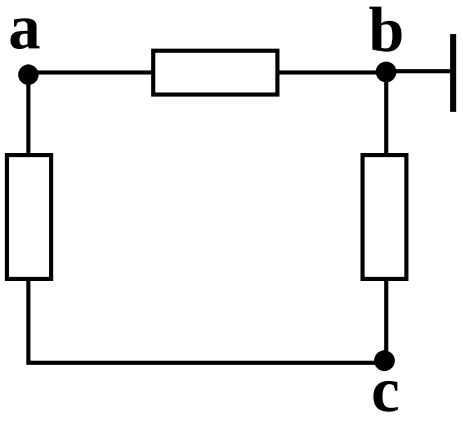

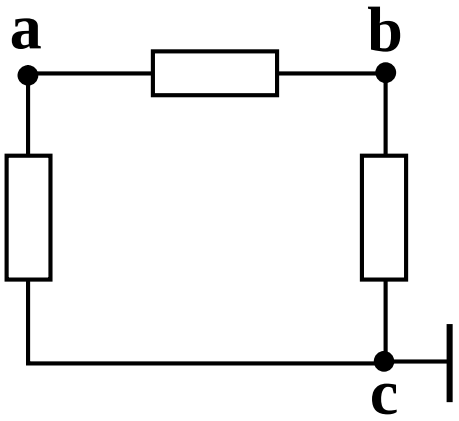

$_b$ 0 $_a$ 2V $_c$ 3V

$_c$ 0 $_a$ 5V $_b$ 3V

U_{ab} 2V U_{bc} 3V

U_{ab} 2V U_{bc} 3V

☞

- ( ) ( )

_____

☞

(1)

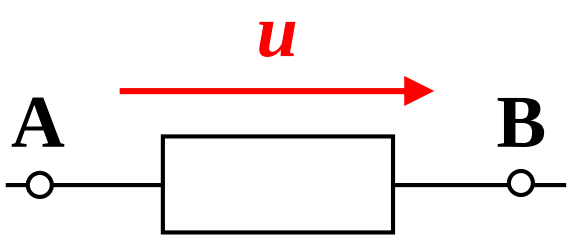

(2)

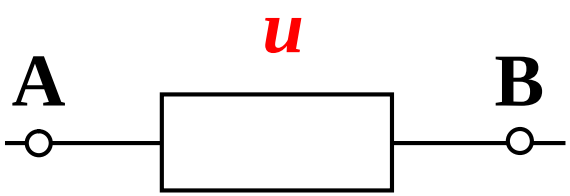

(3)

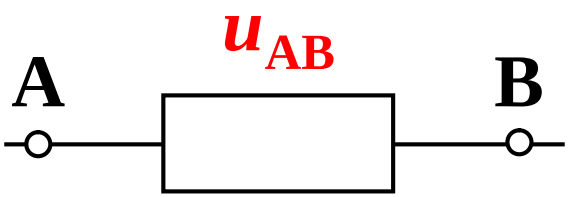

3.

☞ ***u*** ***i***

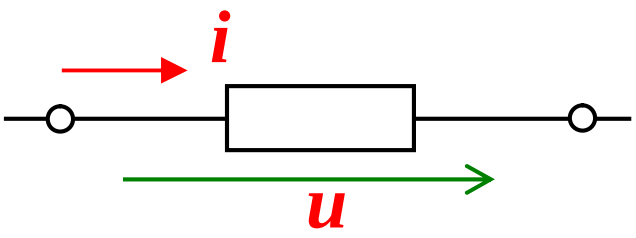

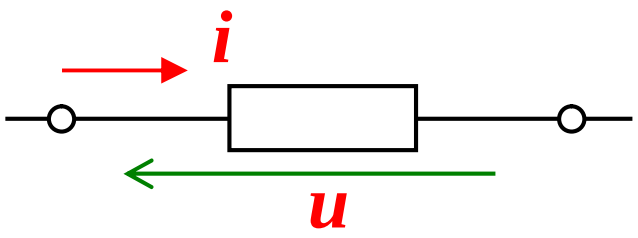

A B

A

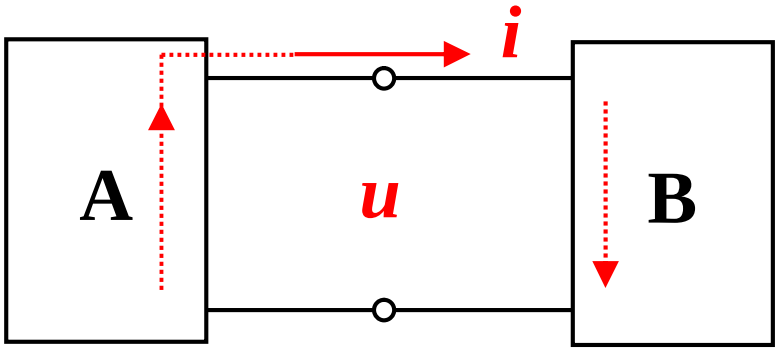

B

1 3

1.

$$p \quad \frac{\mathrm{d}w}{\mathrm{d}t} \qquad u \quad \frac{\mathrm{d}w}{\mathrm{d}q} \qquad i \quad \frac{\mathrm{d}q}{\mathrm{d}t}$$

$$p \quad \frac{\mathrm{d}w}{\mathrm{d}t} \qquad \frac{\mathrm{d}w}{\mathrm{d}q}\,\frac{\mathrm{d}q}{\mathrm{d}t} \qquad ui$$

$p \quad ui$

W ( ) (Watt) kW mW

2.

u *i*

p *ui*

p 0 ( )

p 0 ( )

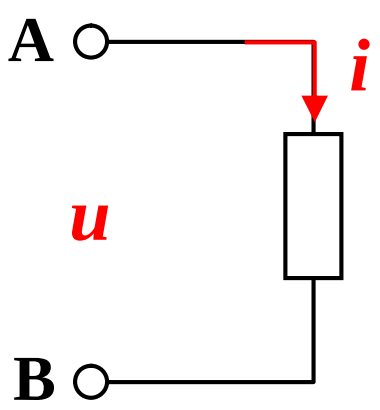

u *i*

p *ui*

p 0 ( )

p 0 ( )

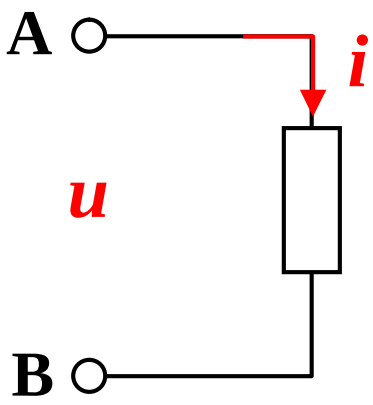

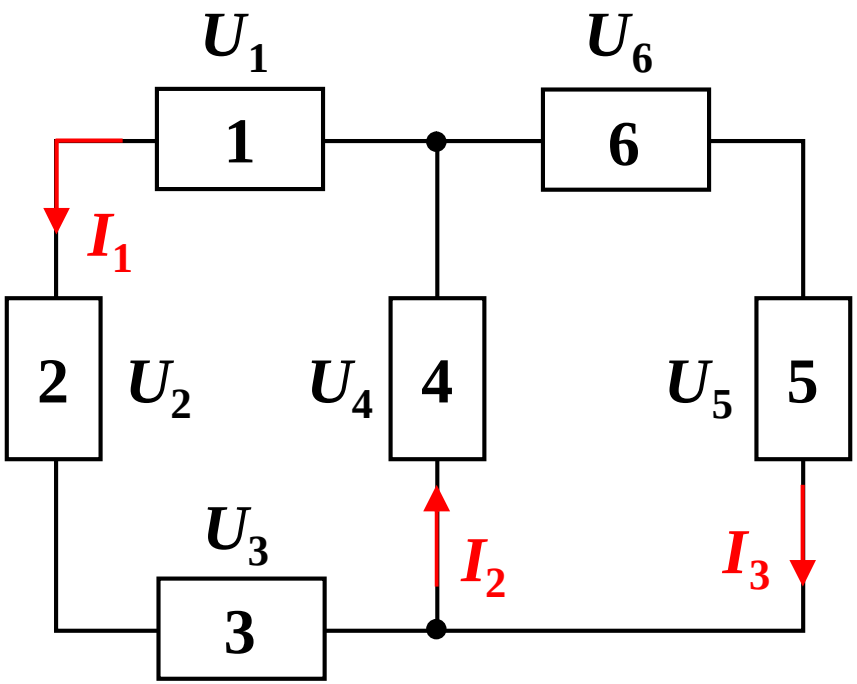

U_1	1V	U_2	3V
U_3	8V	U_4	4V
U_5	7V	U_6	3V
I_1	2A	I_2	1A
I_3	1A		

P_1	U_1I_1	1	2	2W	P_2	U_2I_1	2	6W
P_3	U_3I_1		2	6W	P_4	U_4I_2		4W
P_5	U_5I_3			7W	P_6	U_6I_3		3W

3.

$$p \quad \frac{\mathrm{d}w}{\mathrm{d}t}$$

$$\mathrm{d}w \quad p\ \mathrm{d}t \qquad u\ i\ \mathrm{d}t$$

$t_0 \quad t$

$$w(t) \qquad \int_{t_0}^{t} u(\ \ )i(\ \ )\ \mathrm{d}$$

J ( ) (Joule)

1 4

1.

5

“ ”

5

( ) ( )

2.

☞

☞

$d <<$

$f = 20kHz$ $v = 3 \quad 10^8 \ m/s$

$\frac{v}{f} \quad 15km$

“ ”

“ ”

(

)

(18)

$u \quad i$

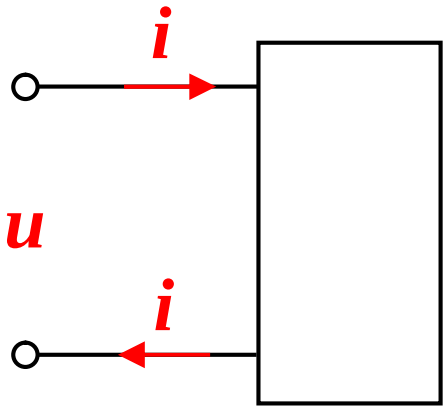

1 5

1.

u i

$f(u,i)$ 0

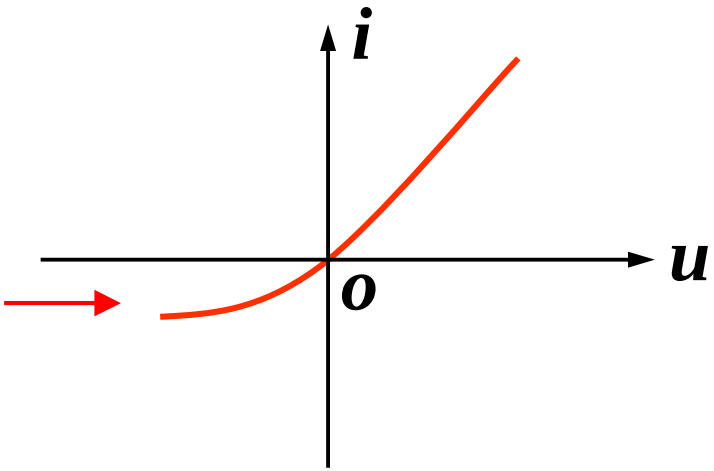

2.

- ( )

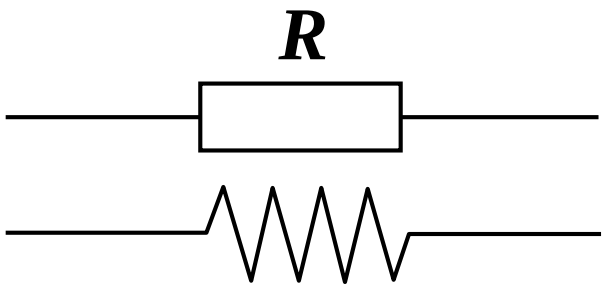

- u i

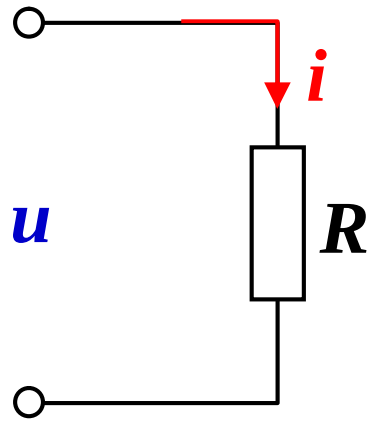

u i

R i $\frac{u}{R}$ u Ri

- R

u V i A R

G $\frac{1}{R}$

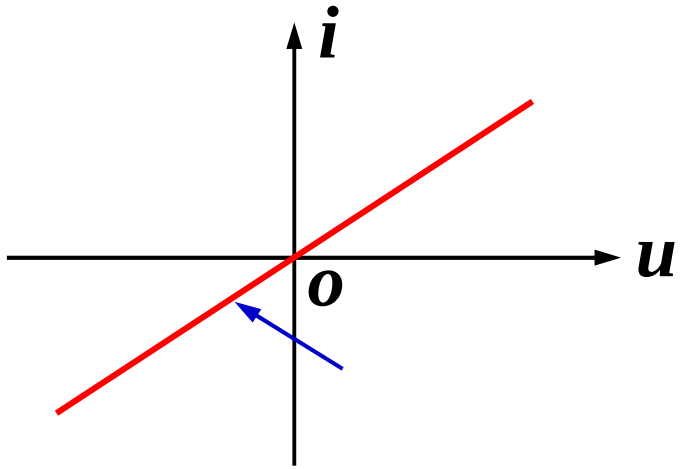

i $G\,u$

G S( )

R G

(*R*)

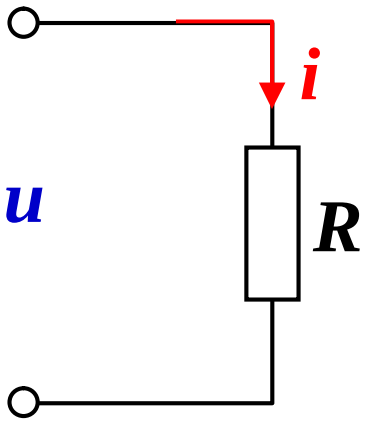

u $R\,i$ or i $G\,u$

3.

- u i

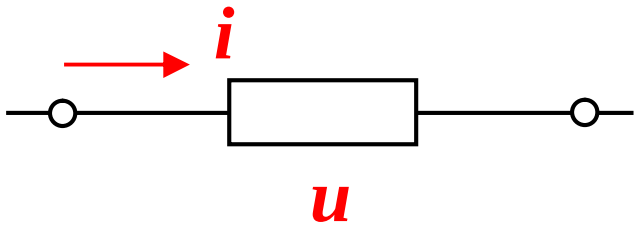

p ui $R\,i^2$ $\dfrac{u^2}{R}$ $G\,u^2$ $\dfrac{i^2}{G}$

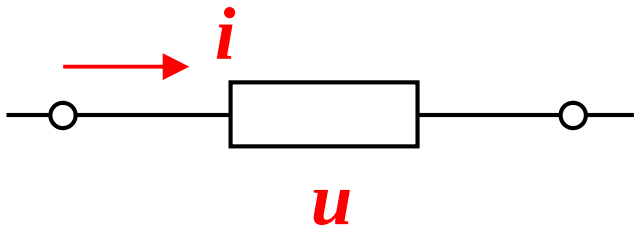

u i

p ui Ri i Ri^2 $\dfrac{u^2}{R}$

- t_0 t

$$w(t) \quad \int_{t_0}^{t} p\,\mathrm{d} \quad \int_{t_0}^{t} u(\ )\,i(\ )\,\mathrm{d}$$

4. I I

① $u = f(i)$ $i = f(u)$

🗣

②

$u(t)$ $R(t)\,i(t)$ $i(t)$ $G(t)\,u(t)$

u i $R(t)$

③

5. ( )

(1)

“ ”

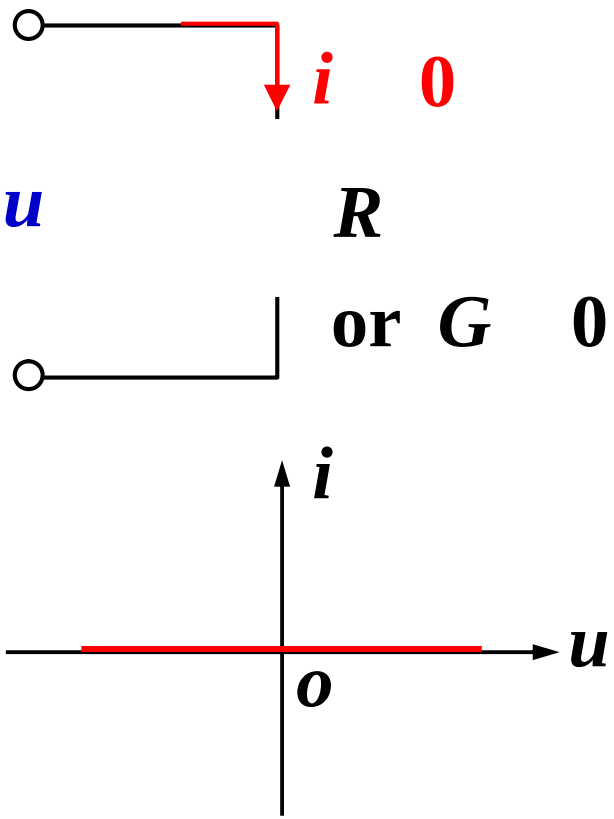

(2)

“ ”

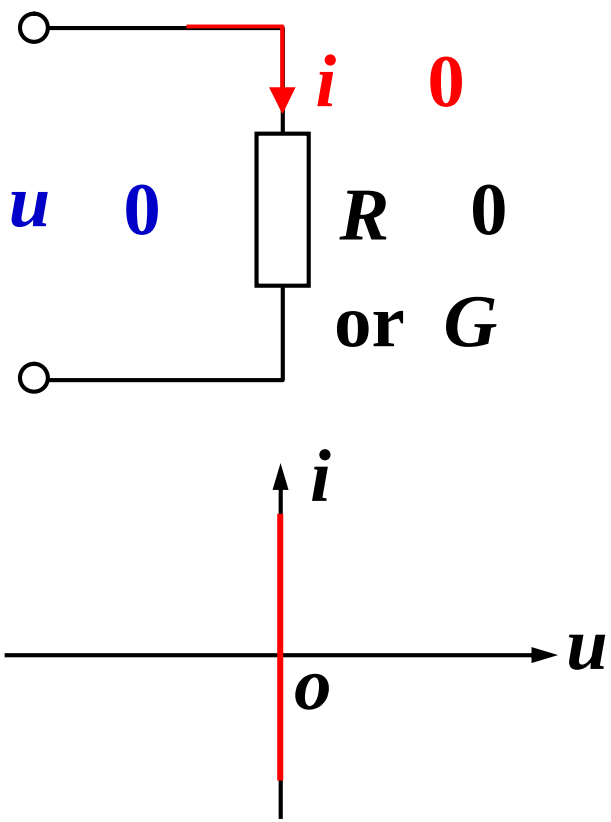

R G

u Ri i Gu

S

p ui i^2R $\frac{u^2}{R}$

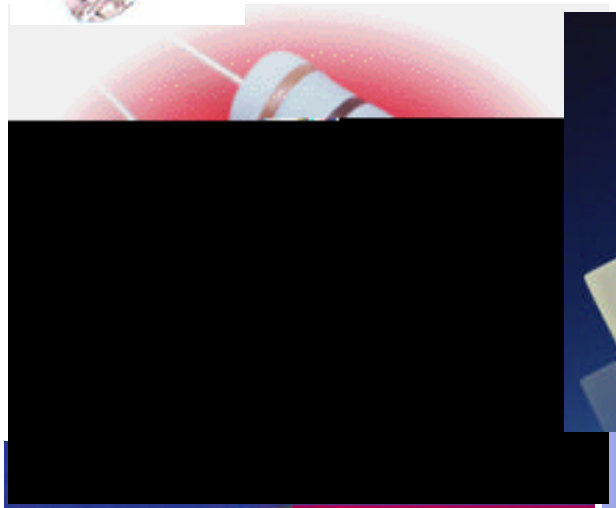

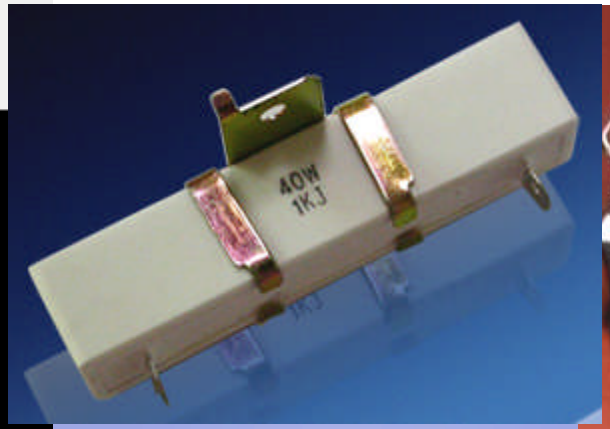
40W
1KJ

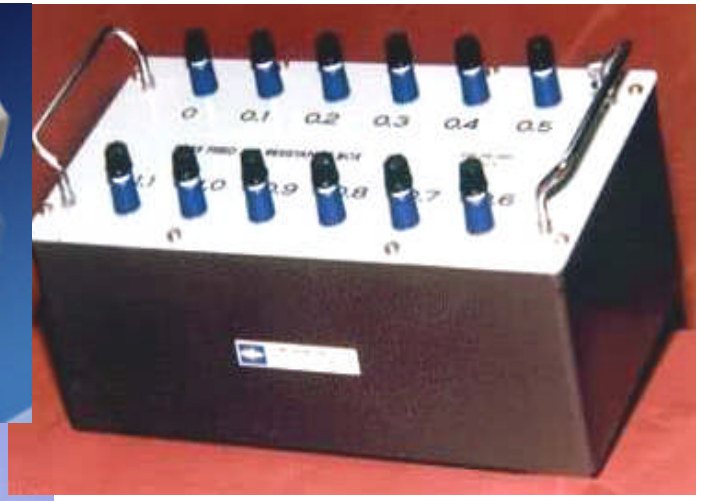
0
0.1
0.2
0.3
0.4
0.5

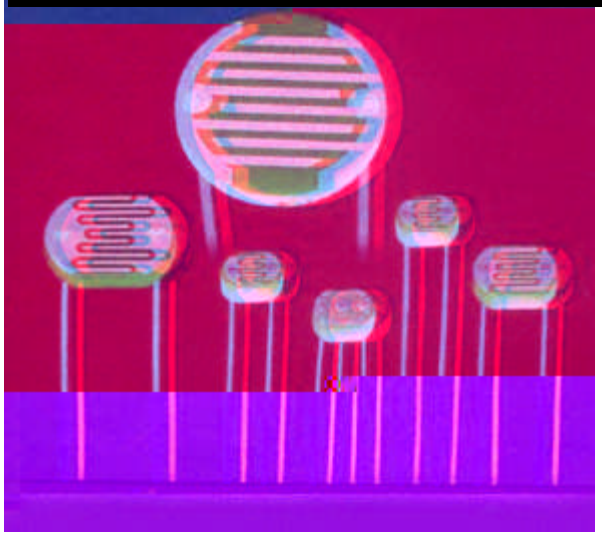

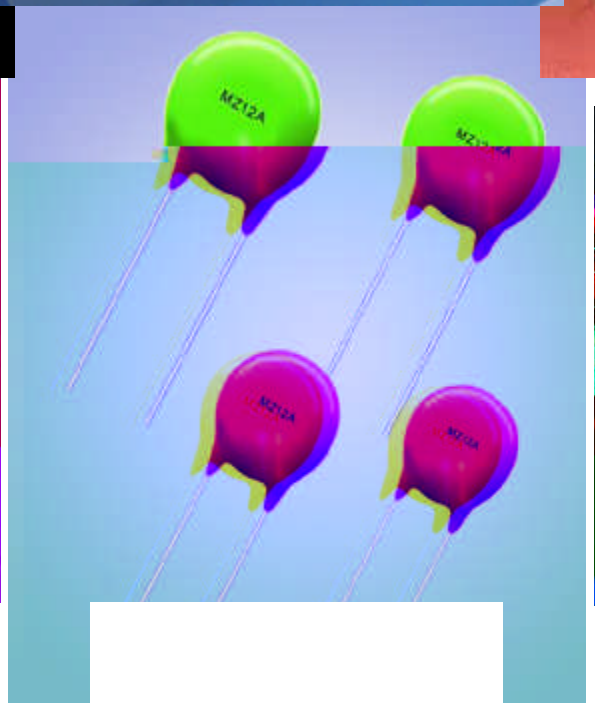
MZ12A

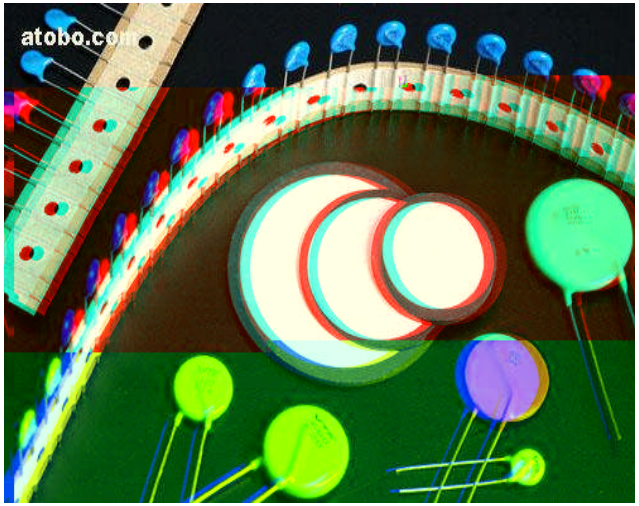
atobo.com

WX25-1
1KΩ±10%

104

BEST
hina.cn

R015
R051
R033
R020
R047
R680
R220
R010
R022
R018
R240
R120
R025
R200
R027
R180
R069
R020
R150
R410
R082
R056
R100
R560
R068

1 6

1.

i

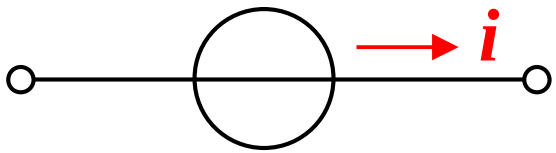

•

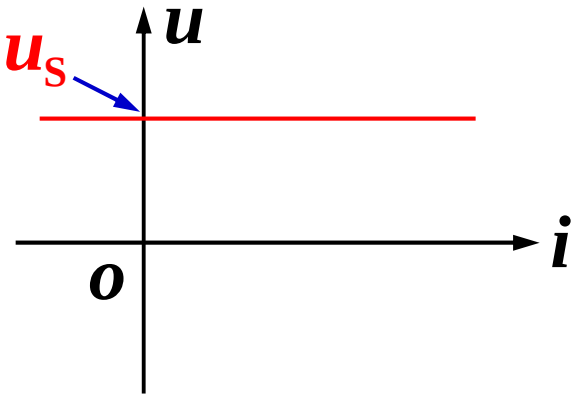

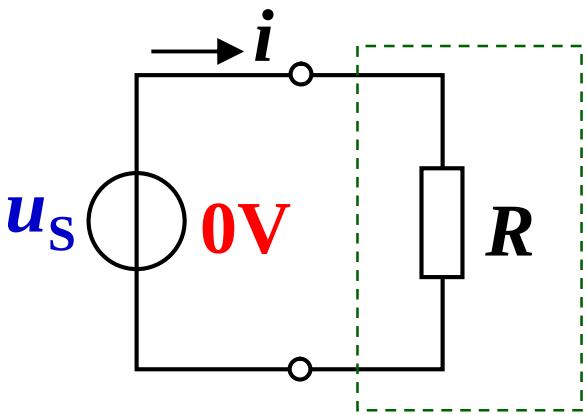

i $\frac{u_S}{R}$

$R=$ ( ) i

R i

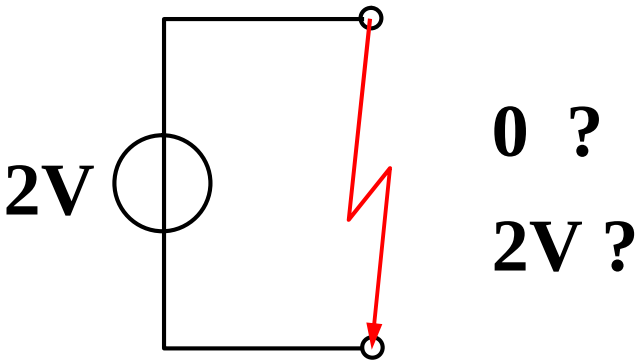

u_S 0

u_S 0

- $P \quad u_s i$

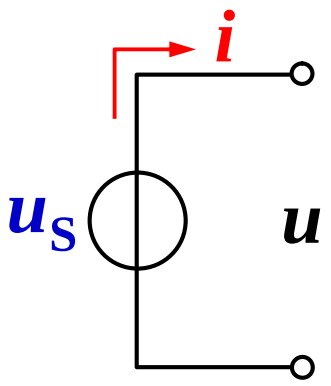

( )

$P \quad u_s i$

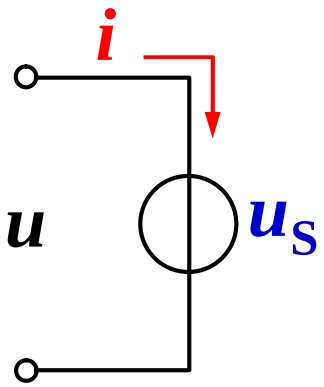

$P \quad u_s i$

u_R V

$i \quad \frac{u_R}{R} \quad \frac{5}{5}$ A

$P_{10V} \quad u_s i$ W

$P_{5V} \quad u_s i$ W

$P_R \quad Ri^2$ W

$P \qquad P$

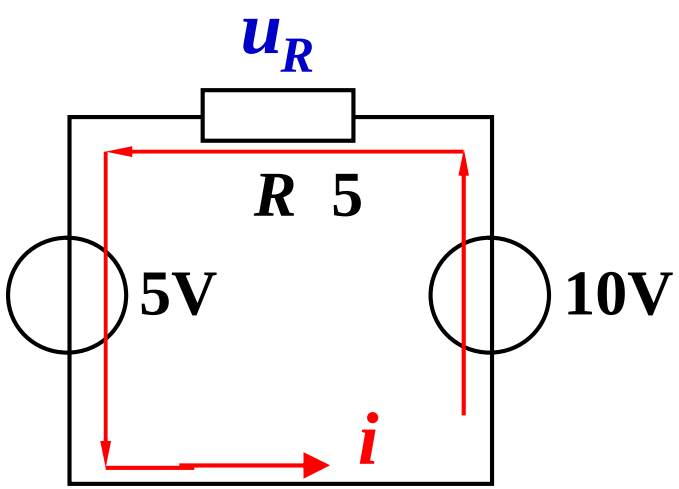

2.

- u

- 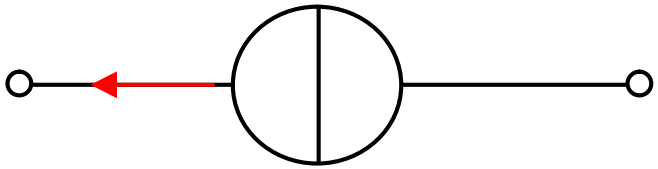

u

-

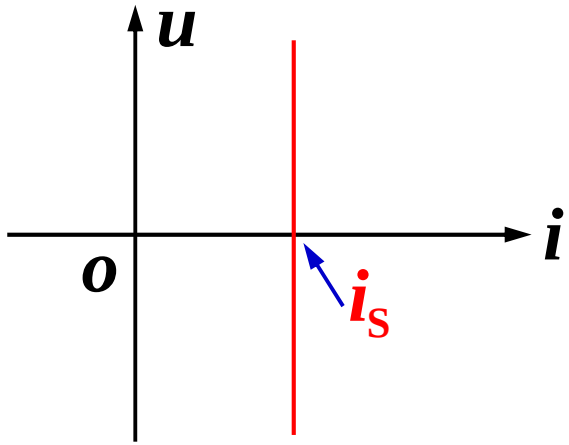

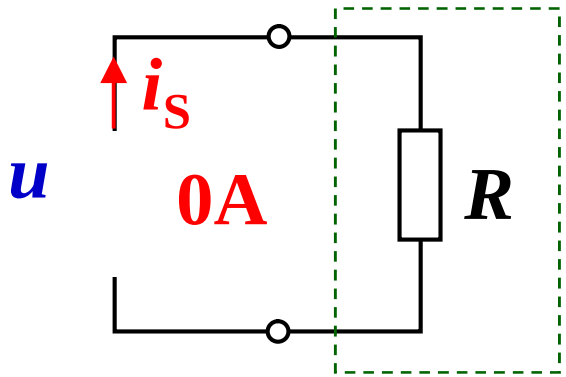

$u \quad Ri_S$

$R \qquad u \quad 0$

$R \qquad u$

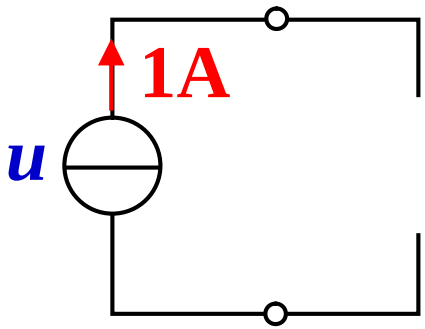

0 ?

1A ?

$i_S \quad 0$

$i_S \quad 0$

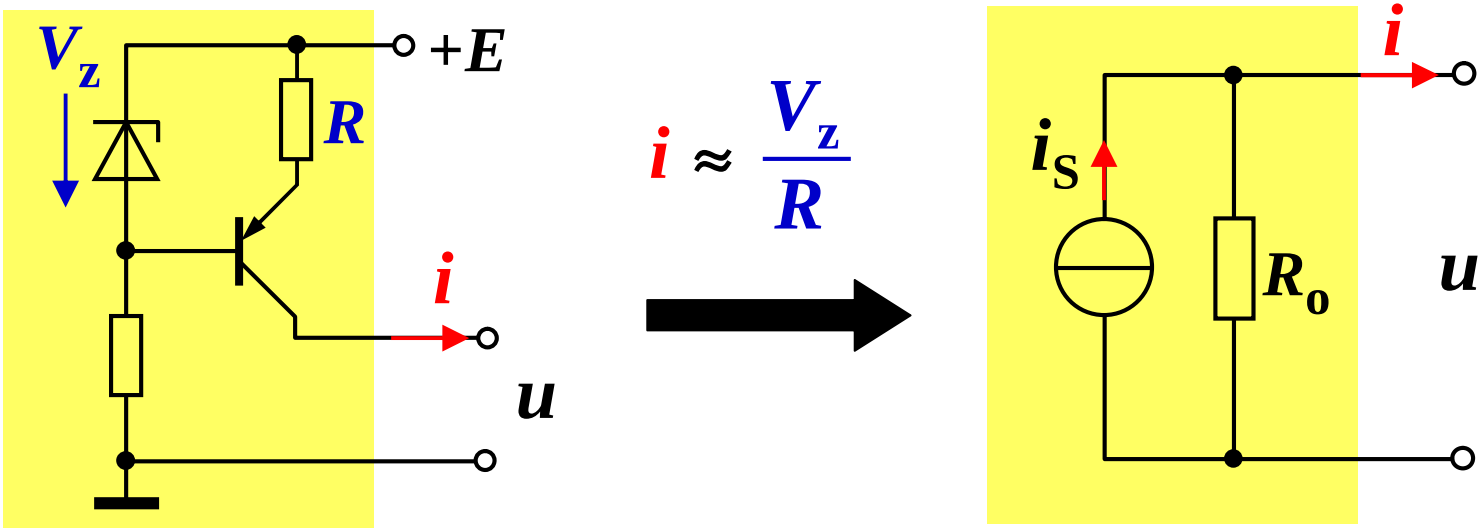
V_z
$+E$
R
i
u
$i \approx \frac{V_z}{R}$
i
i_S
R_o
u

- $P \quad ui_s$

$P \quad ui_s$

$P \quad ui_s$

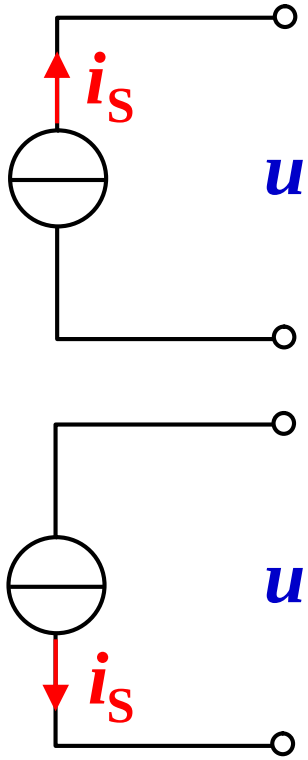

R 0

U

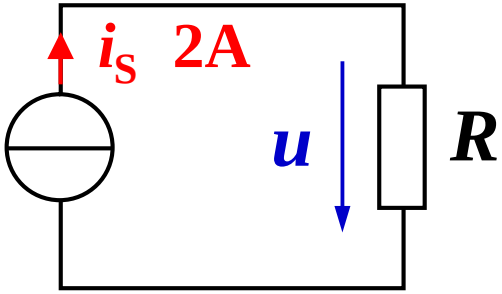

(1) R u Ri_S

P ui_S $i_S^2 R$

R u

(2) R 0 u 0 P ui_S 0

(3) R u P ui_s

i i_S

u u_S 5V

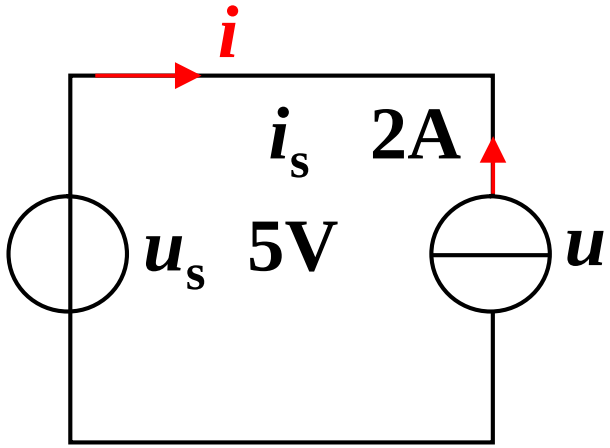

P_{2A} ui_s W

P_{5V} $u_s i$ W

5V (10 W

10W

P P

3.

(1) **(** **)**

🗣 ***1.5V***

(***)*** ***(*** ***)***

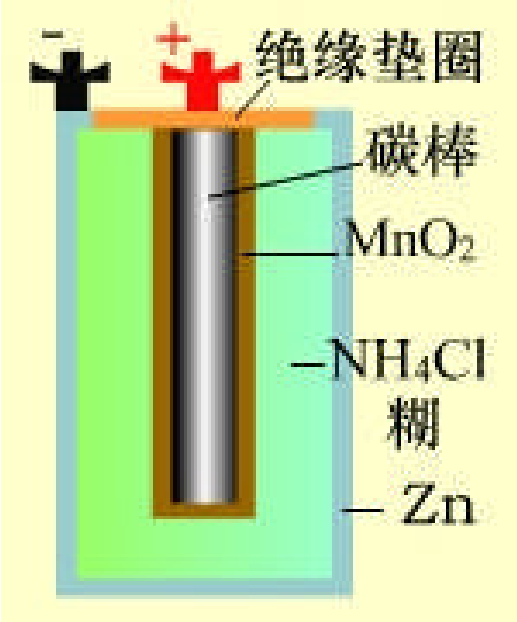

(2) **(** **)**

🗣 ***1.35V***

(***)***

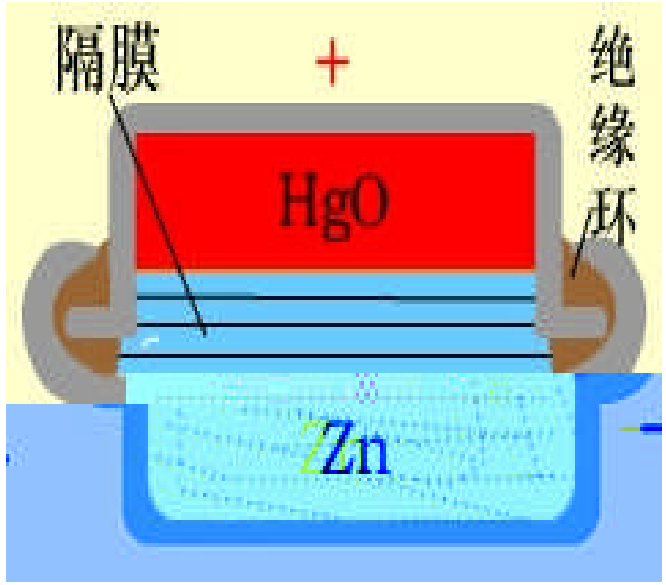

(3) ( )

1.23V

40 45%

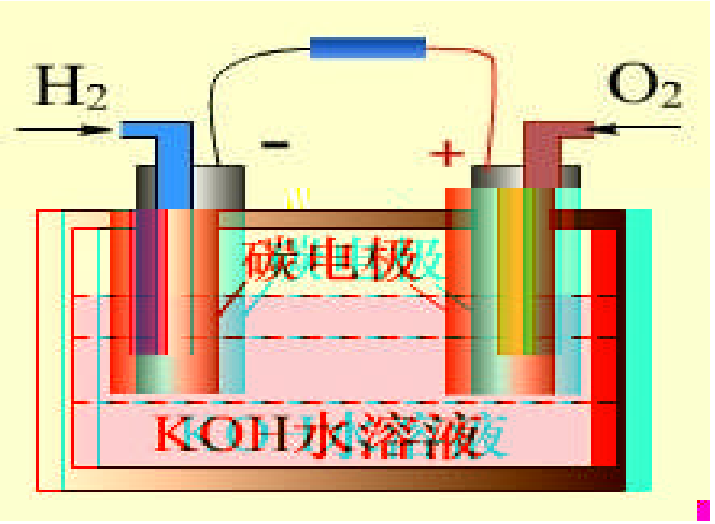

(4) ( )

P- N

N P

11%

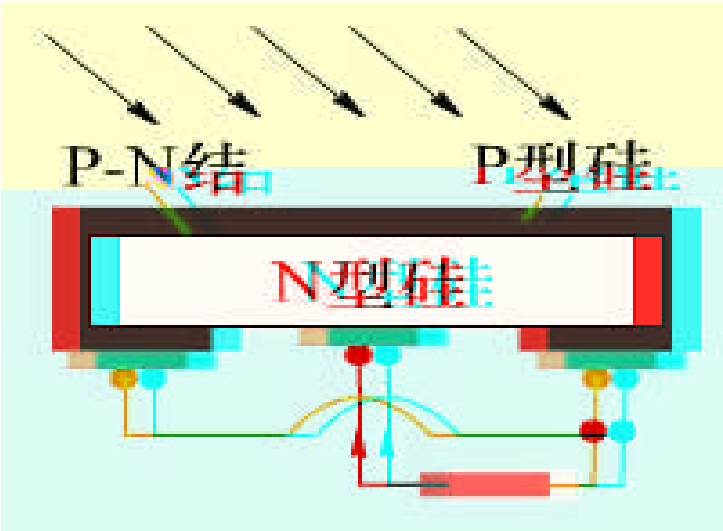

50cm² ***0.6V*** ***0.1A***

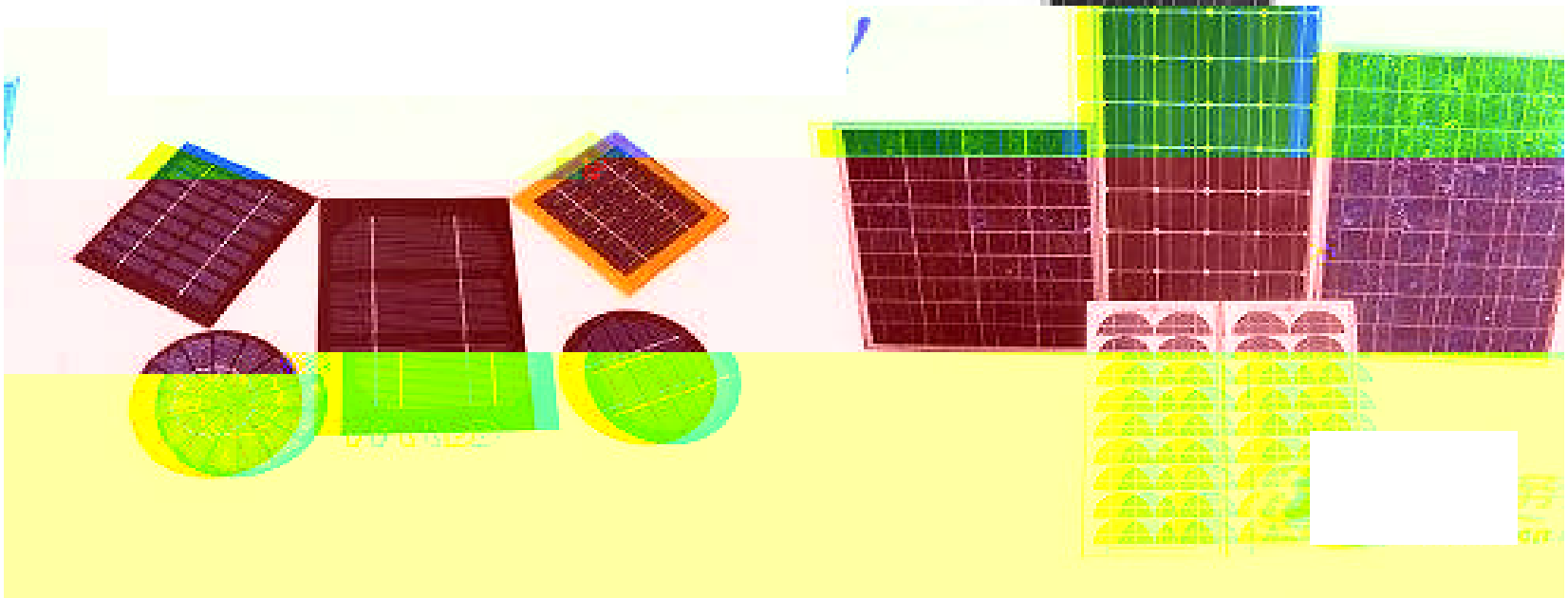

(5) ( )

🗣 *2V*

2V

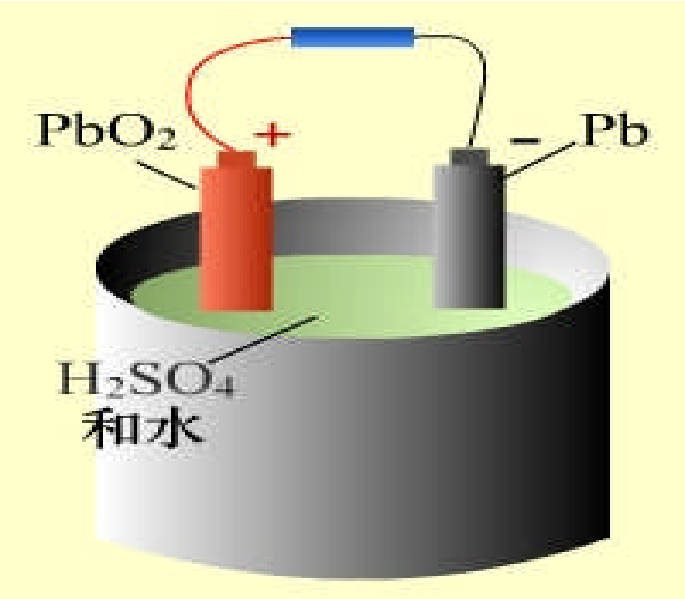

(6)

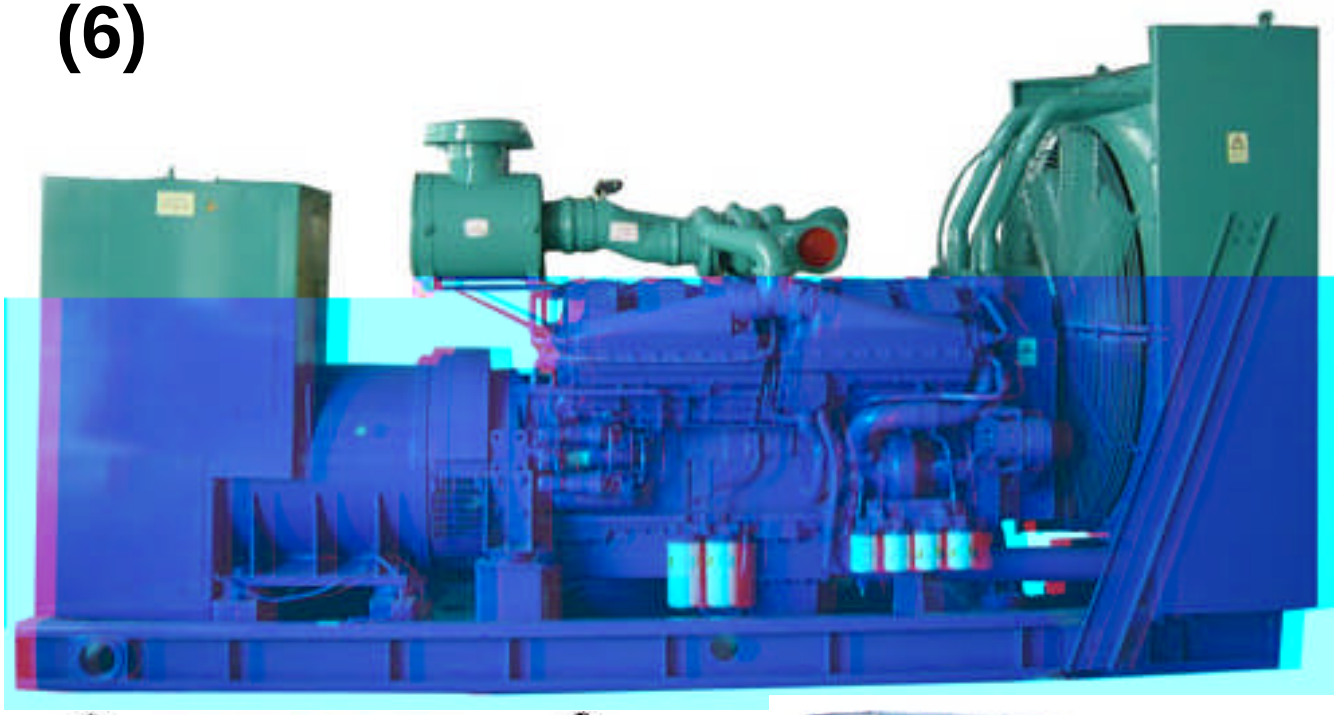

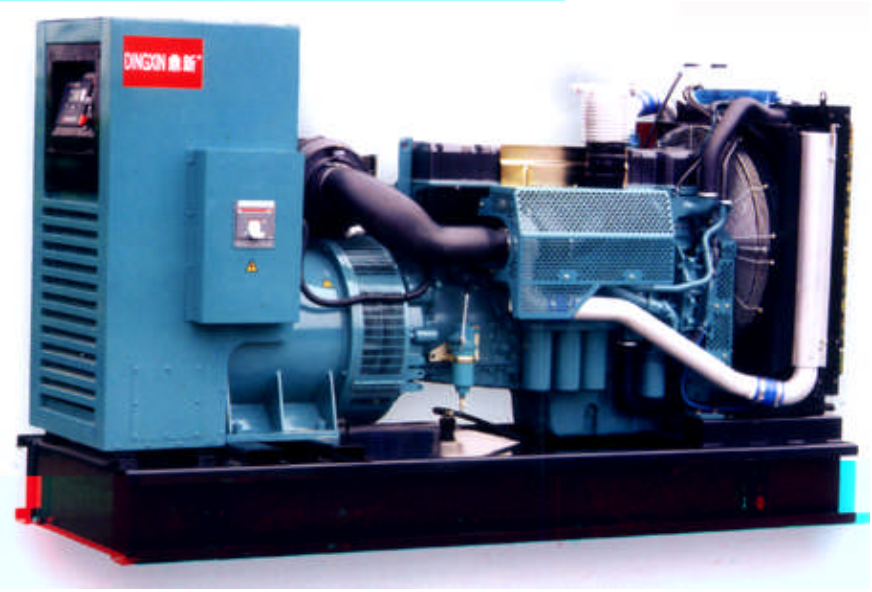

AAB
http://china.machine365.co

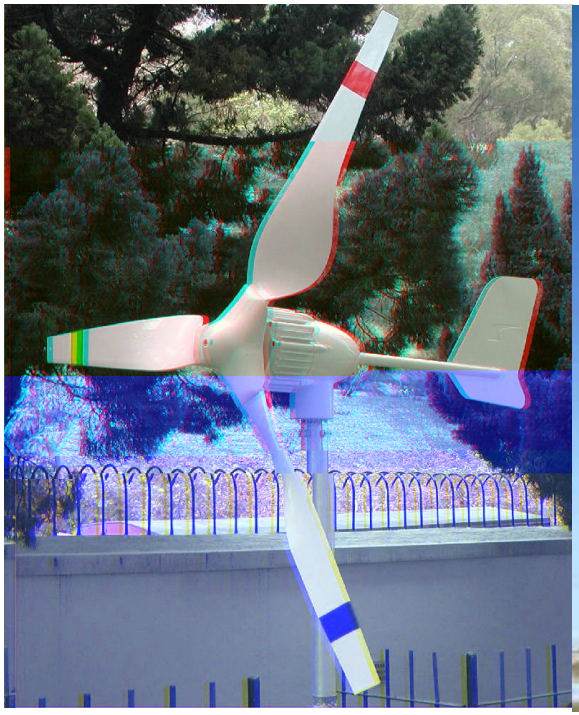

(7)

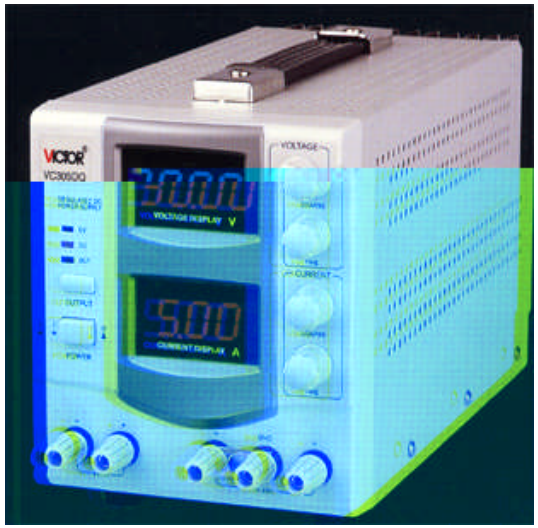
VICTOR
VC3000Q
30.00
5.00

DH1718D-5

SVC
500VA
全自动交流稳压电源
AC AUTOMATIC VOLTAGE REGULATOR

1 7 ( )

1.

(

)

- 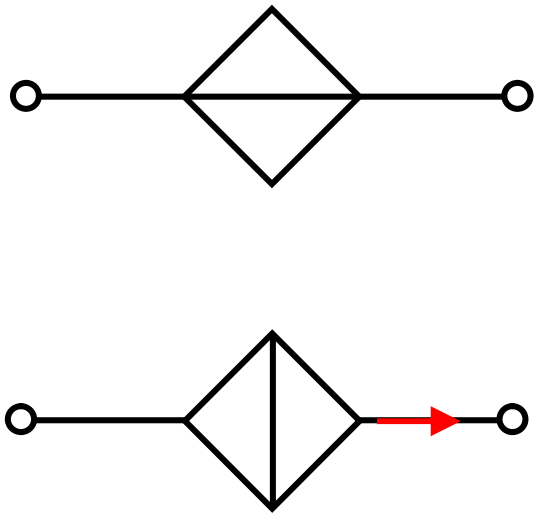

2.

u ***i***

(1) (CCCS)

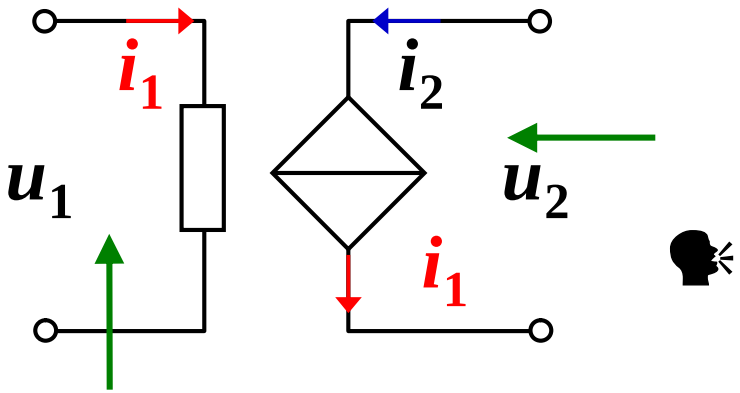

i_2 i_1

$(i_c \quad i_b)$

(2) (VCCS)

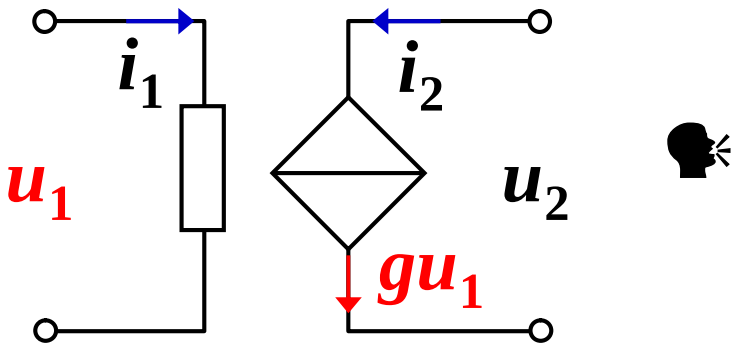

i_2 gu_1 g

$(i_d \quad gu_{gs})$

(3) (VCVS)

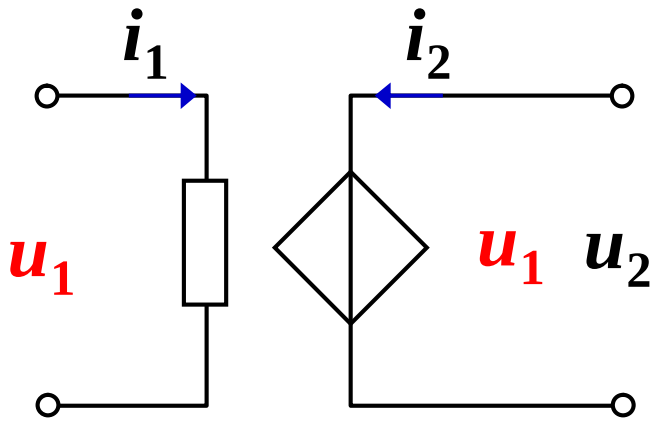

u_2 u_1

$(u_o \quad Au_d)$

(4) (CCVS)

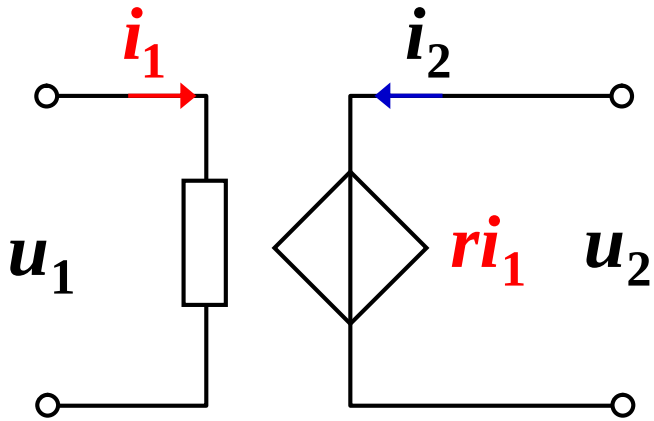

u_2 $r\,i_1$

r

$(u_o \quad ri_f)$

🗣 *g r*

“ ”

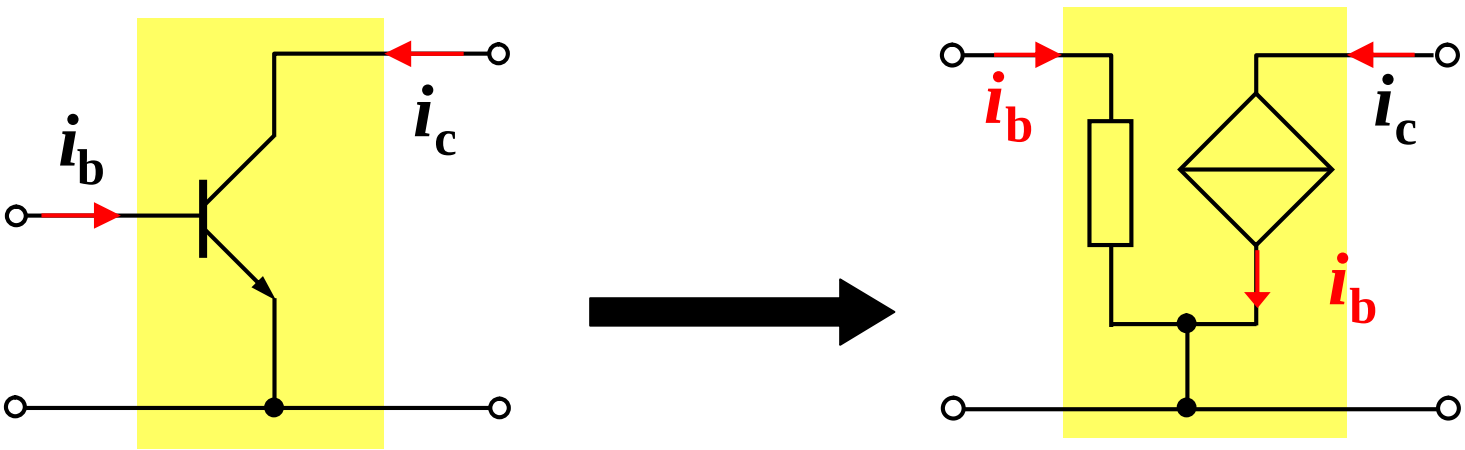

3.

( )

(

)

“ ”

“ ”

)

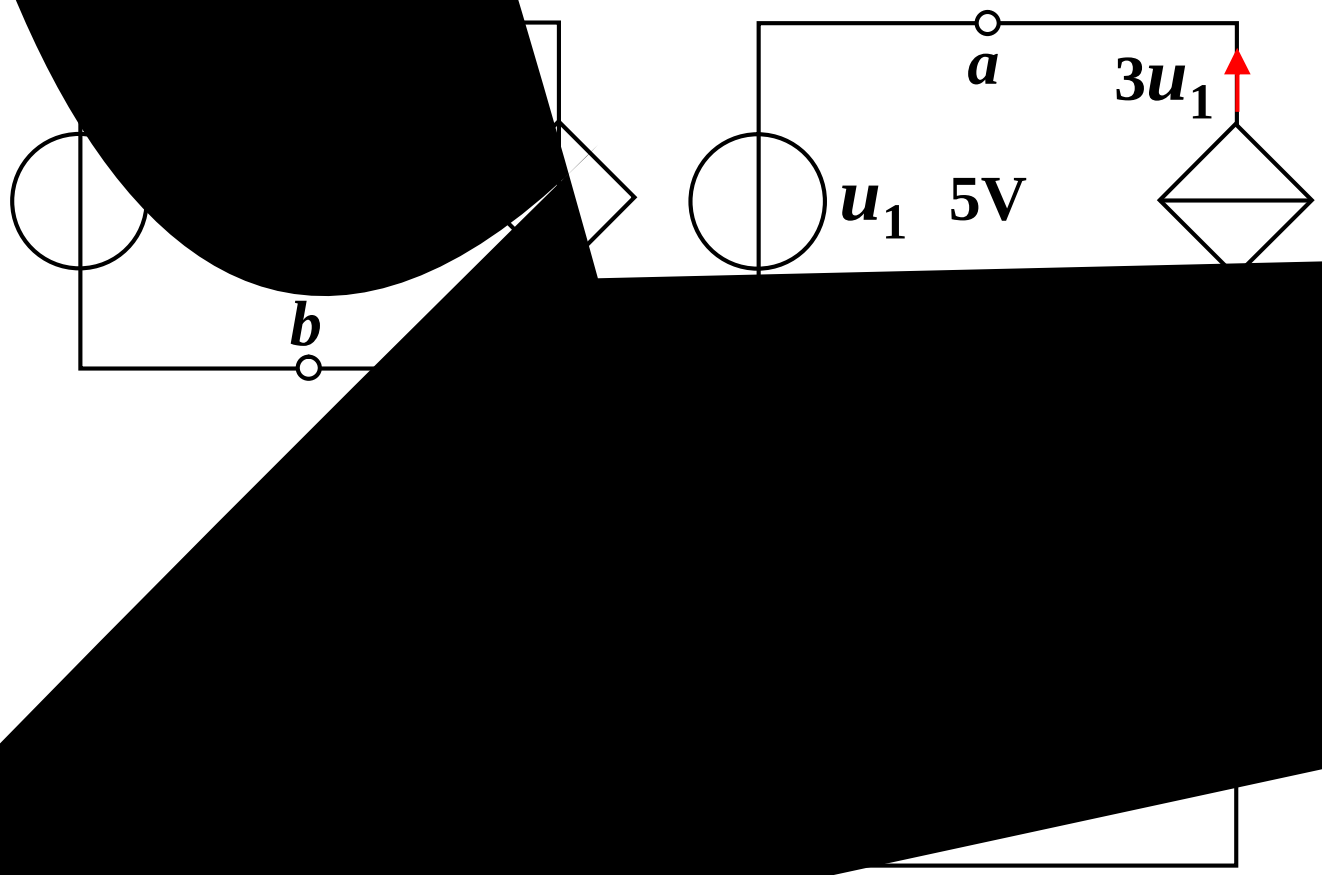
a
3u1
u1 5V
b

u_2 ?

$i_1 \quad \frac{u_1}{3} \quad 2A$

$u_2 \quad 5i_1 \quad u_1$

$\times 2 \quad 6$

V

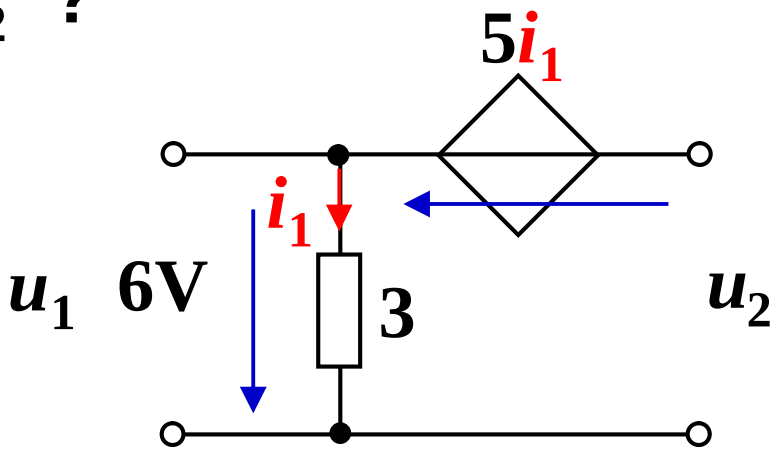

1–9 (KL)

(KCL)

(KVL)

(VCR)

$u_R \quad Ri_R$

(KCL KVL)

KL VCR

1.

(1)

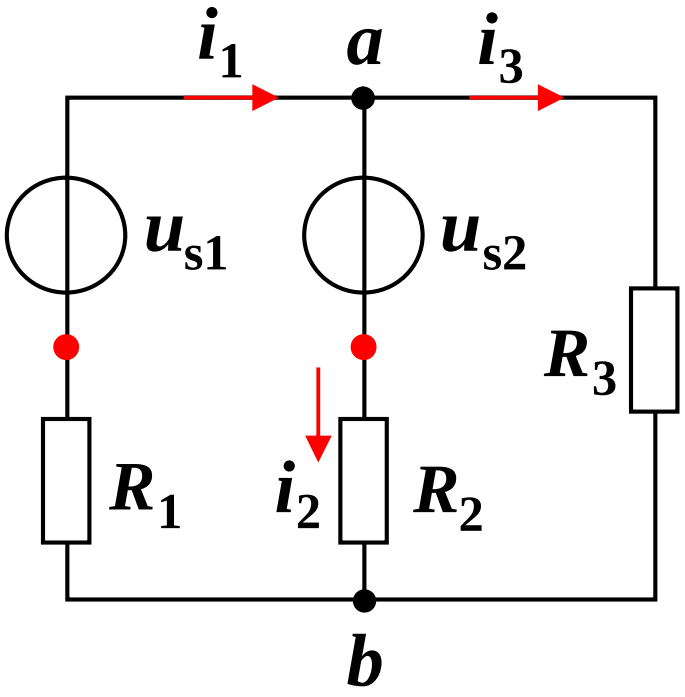

b 5

b 3

(2)

n 4

n 2

☞

(3)

(4) l 3

(5)

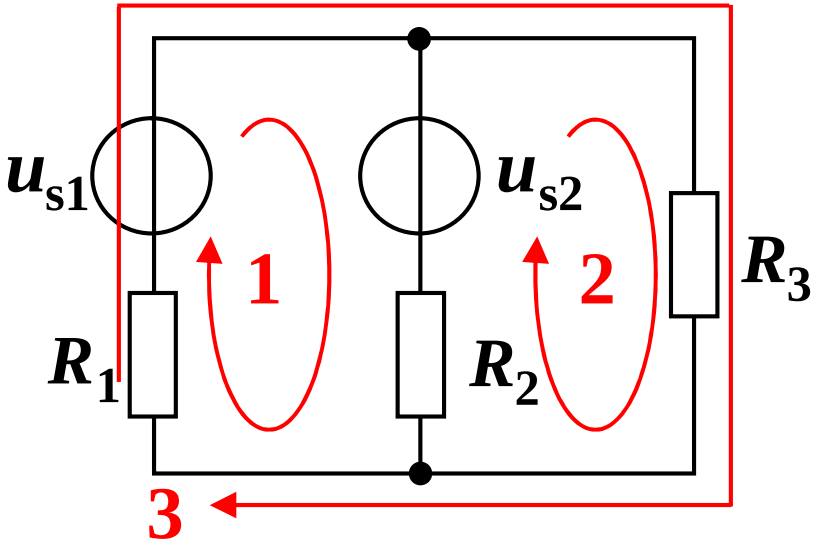

☞

2. KCL ( )

🗣 *KL 1845*

🕯 (

)

b

$i_m(t)$ 0 i i

m 1

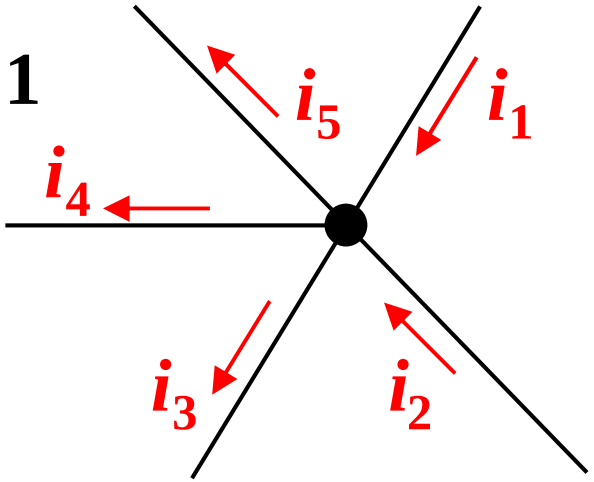

i_1 i_2 i_3 i_4 i_5 0

i_1 i_2 i_3 i_4 i_5

2 $i_1 \quad i_2 \quad i_3 = 0$

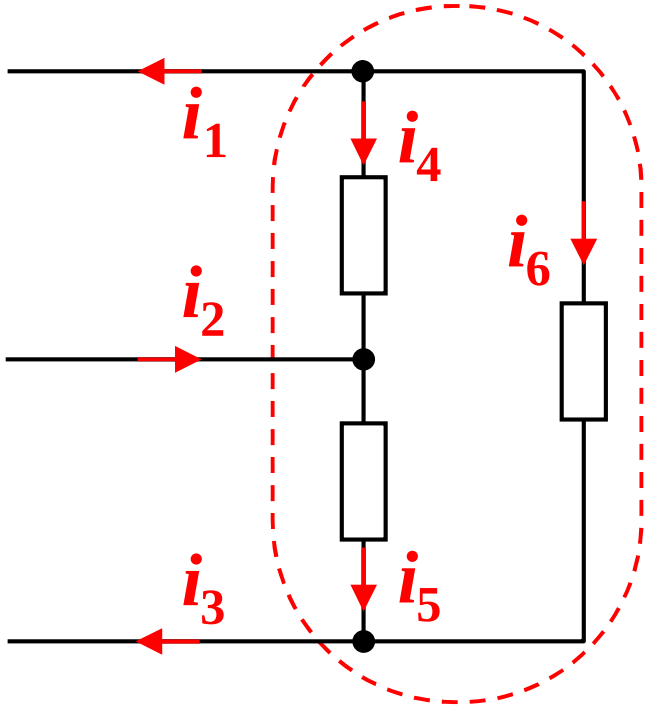

$$i_1 \quad \cancel{i_4} \quad \cancel{i_6} \quad 0$$

$$i_2 \quad \cancel{i_4} \quad \cancel{i_5} \quad 0$$

$$i_3 \quad \cancel{i_5} \quad \cancel{i_6} \quad 0$$

3 $i_1 \quad i_2 \quad i_3 \quad 0$

KCL

☞

KCL

KCL

KCL

KCL

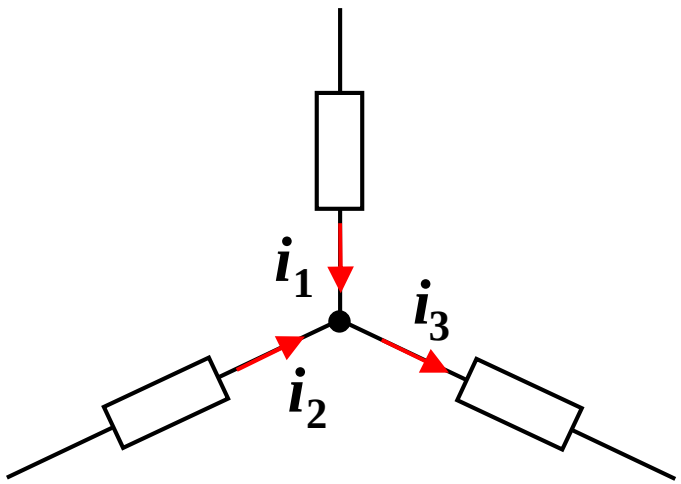

i_2 2A i_3 3A

i_1

i_1 i_2 i_3 0

i_1 i_2 i_3

2)

3. (KVL)

n

$u_m(t)$ 0 u u

m 1

(

)

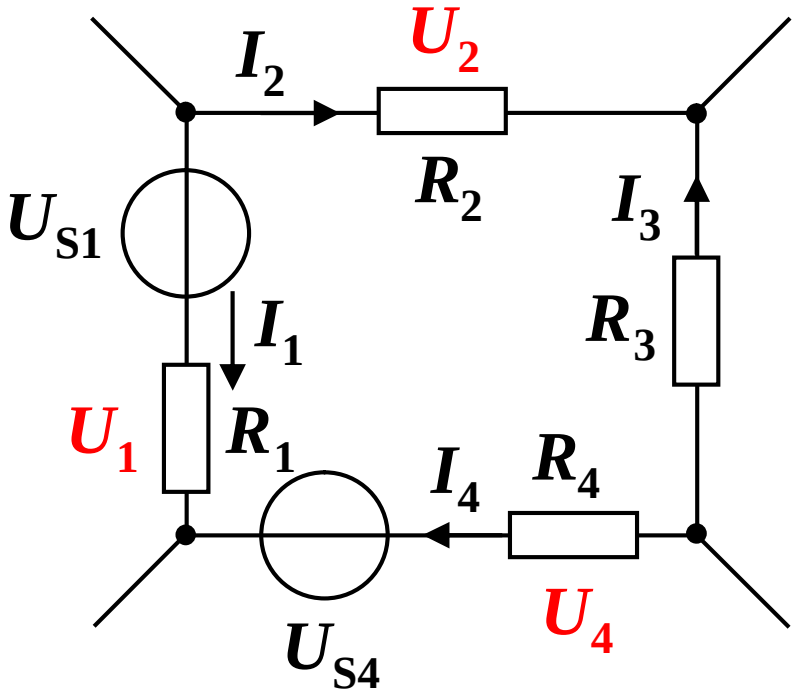

KVL

U_{13} U_S U_1 U_2

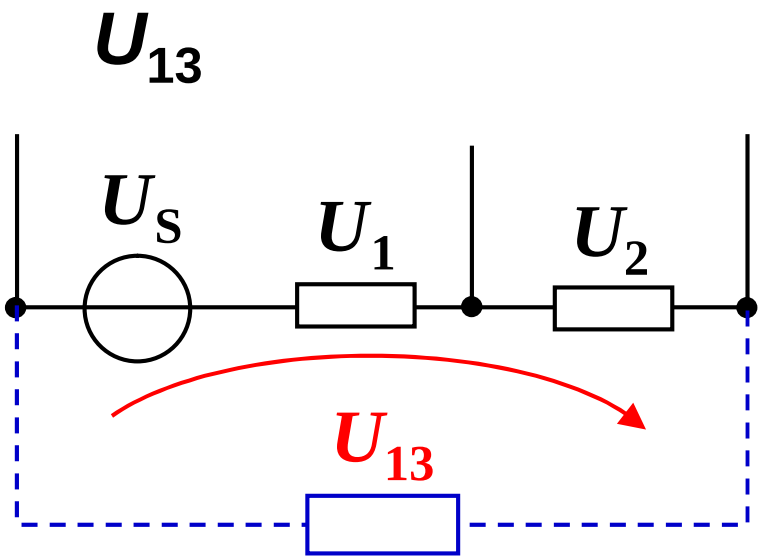

KVL

KVL

KVL

4. KCL KVL

KCL KVL

KCL KVL

KCL KVL

( )

KCL KVL

1 *i*

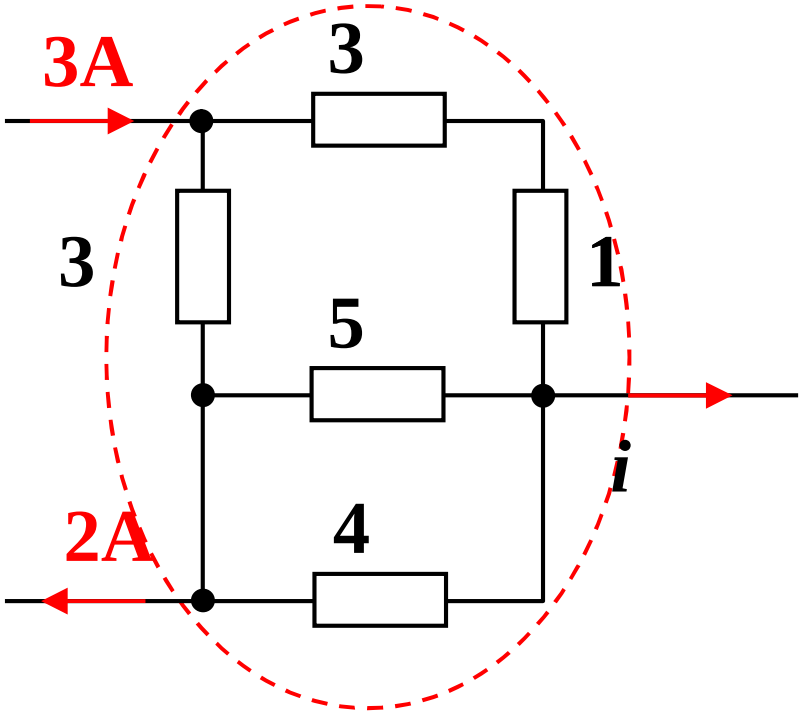

i 3 (2) 5A

2 *u*

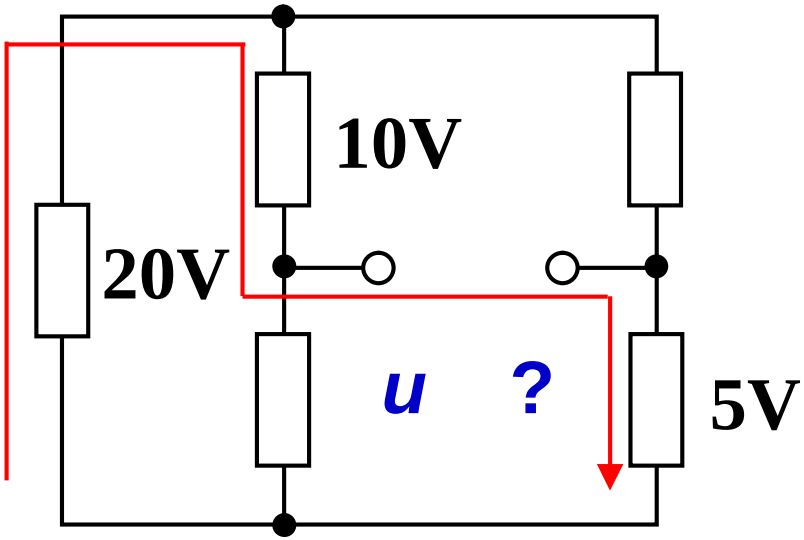

20 10 *u* 5 0

u 10 20 5

15V

3 i

$3i$ 4 5

i 3A

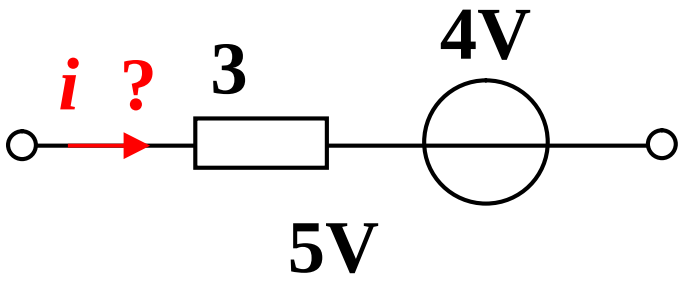

4 u

u 3 2 4

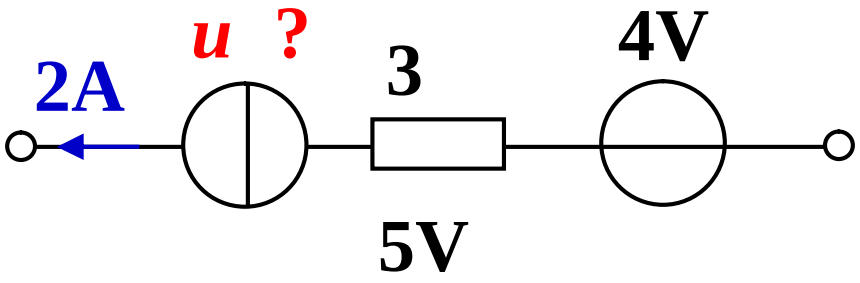

☞

5 I

$10I_1$ 10 10)

I_1 2A

I I_1 1 2 1 3A

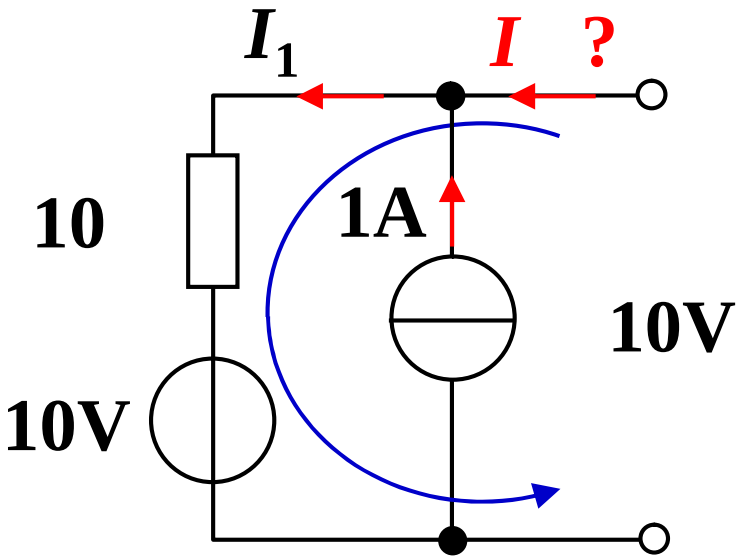

6 U

I 10 3 7A

U 4 $2I$ 0

U $2I$ 4

14 4 10V

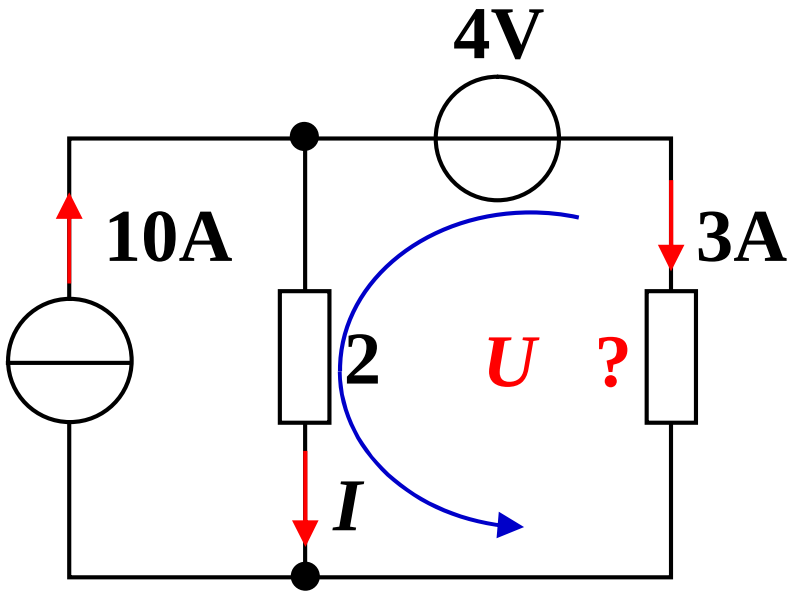

7

5

8 U

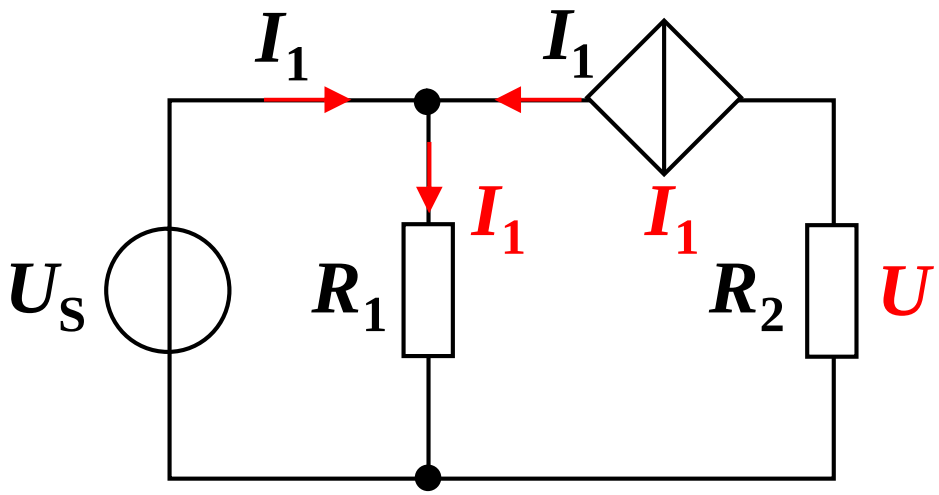

$U \quad R_2 \quad I_1$

$U_S \quad R_1(I_1 \quad I_1)$

$$I_1 \quad \frac{U_S}{R_1(1 \quad)}$$

$$U \quad R_2 \frac{U_S}{R_1(1 \quad)}$$

$$\left| \frac{U}{U_S} \right| \quad \frac{R_2}{R_1} \frac{}{1}$$

1.

2.

3. *p ui*

4.

5. (2) (4)

6. (VCR) (KCL KVL)